PRODUCT SHEET

Description:
Shower Hinge "CPH III", 180 DG, Glass/Glass,SS-Look, 6-10mm Glass Thickness, W/Angle Adjustment Function, & 15DG Return Function, Brass Material, Chamfered Edges

Item number:
15.24.059-5

Units	Box	Carton	HS Code	Barcode
Pcs.	1	20	8302100090	5704866502221

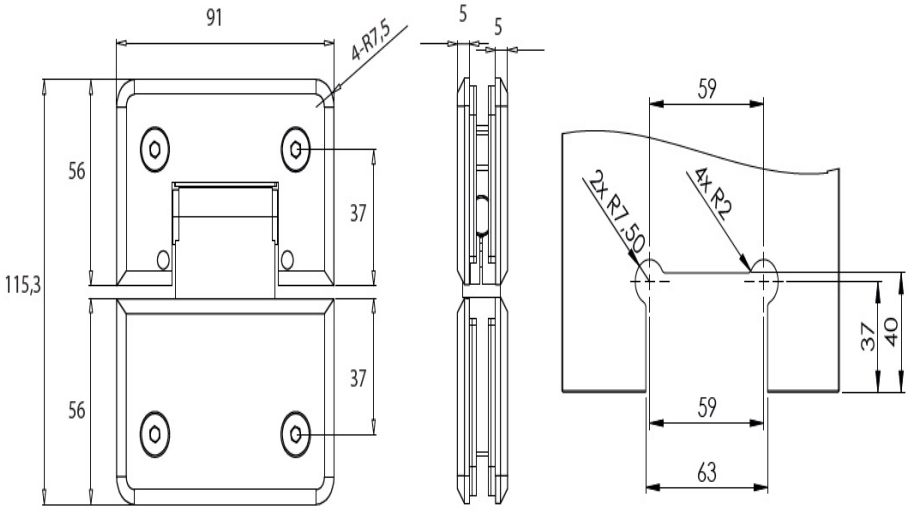

SISO A/S
Mileparken 11
DK-2740 Skovlunde
Denmark
VAT: DK 24786013

Phone +45 45 830 900

www.siso.dk
siso@siso.dk

Danske Bank
Nytorv Branch
Copenhagen
SWIFT: DABADKKK

Account no.
4180 3112 112936
IBAN Account
DK7230003112112936